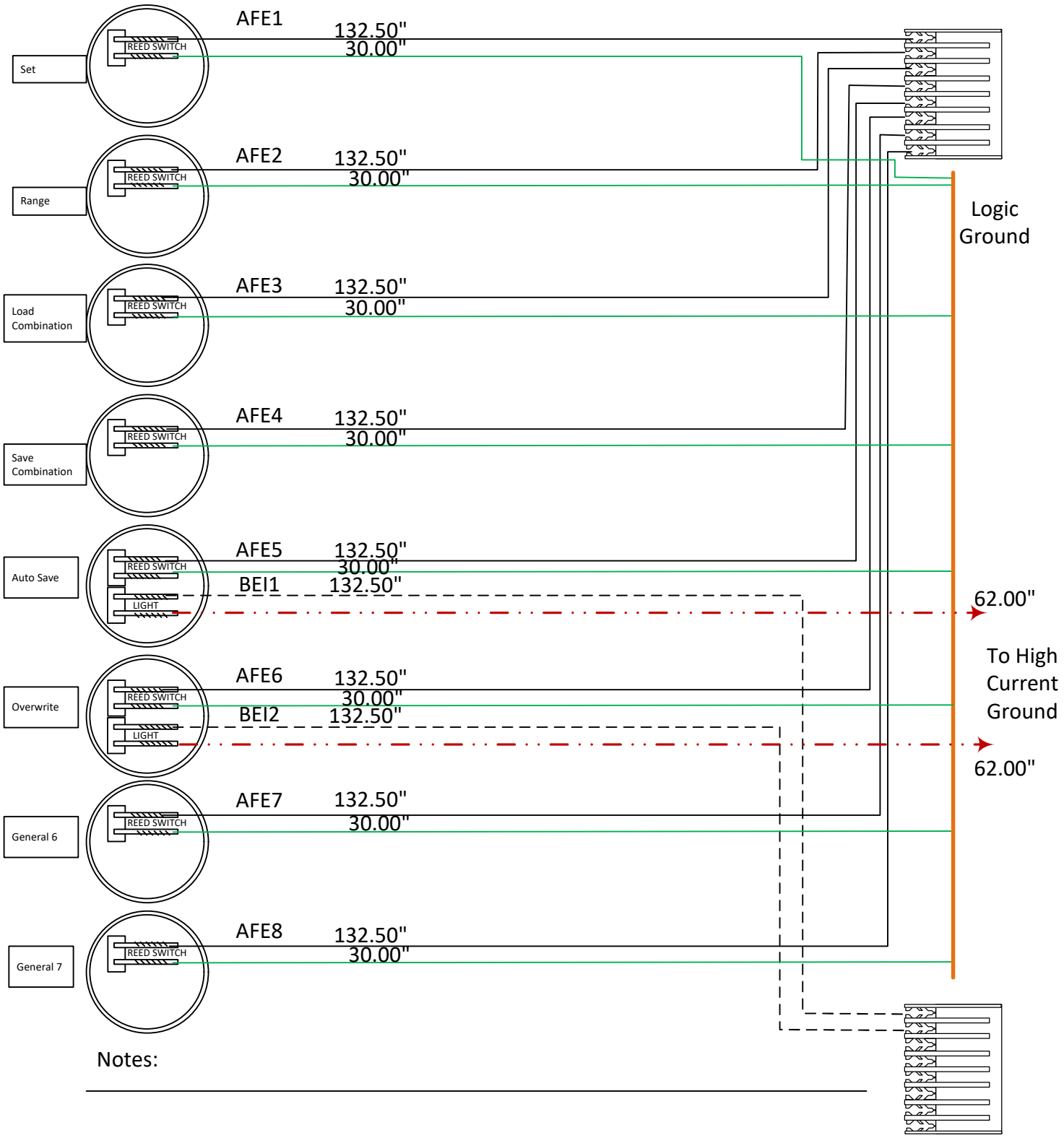
Set
Range
Load Combination
Save Combination
Auto Save
Overwrite
General 6
General 7
REED SWITCH
LIGHT
AFE1
AFE2
AFE3
AFE4
AFE5
AFE6
AFE7
AFE8
BEI1
BEI2
132.50"
30.00"
Logic Ground
62.00"
To High Current Ground

Notes:

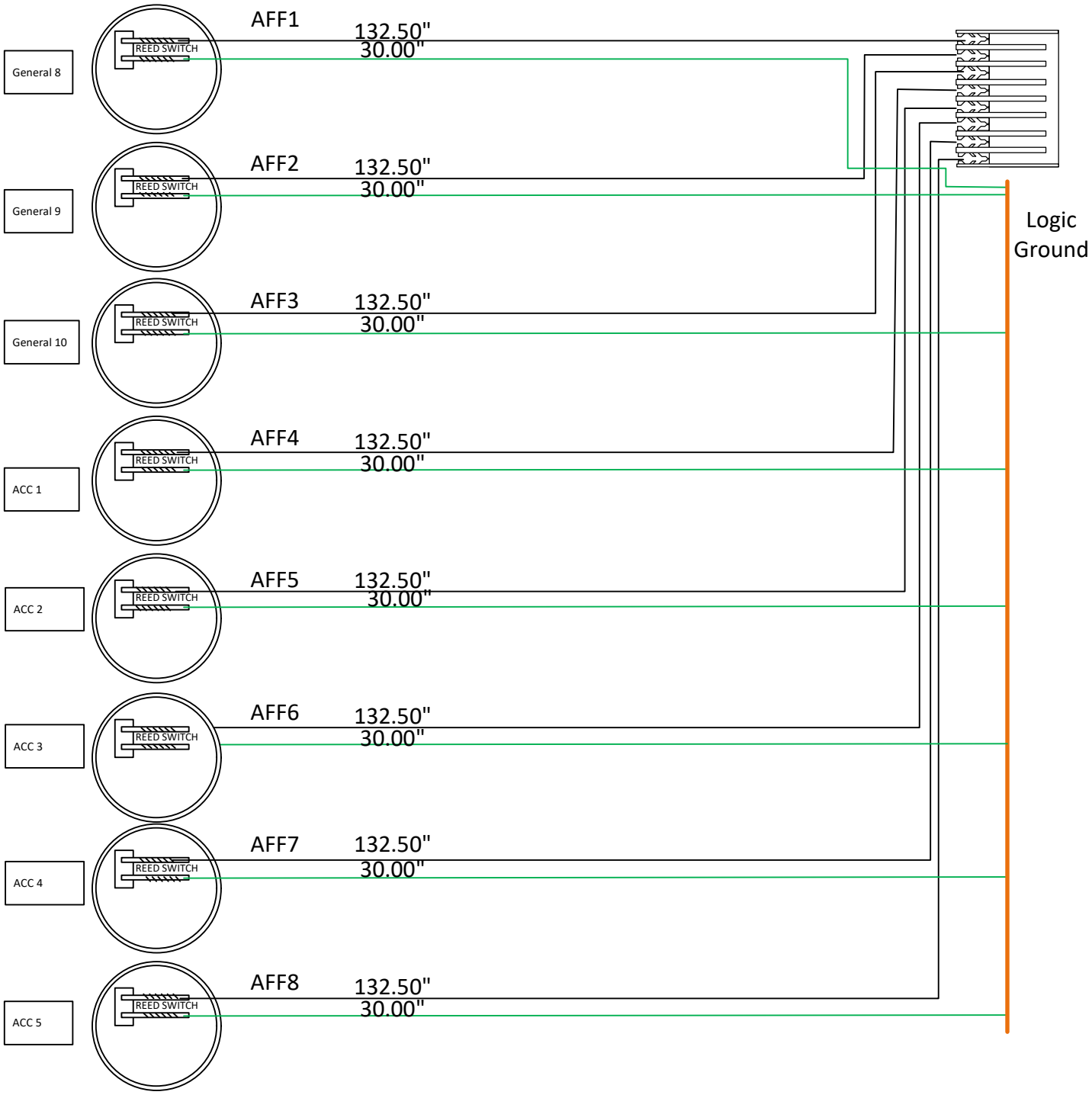
General 8
General 9
General 10
ACC 1
ACC 2
ACC 3
ACC 4
ACC 5
REED SWITCH
AFF1
AFF2
AFF3
AFF4
AFF5
AFF6
AFF7
AFF8
132.50"
30.00"
Logic Ground

Notes:

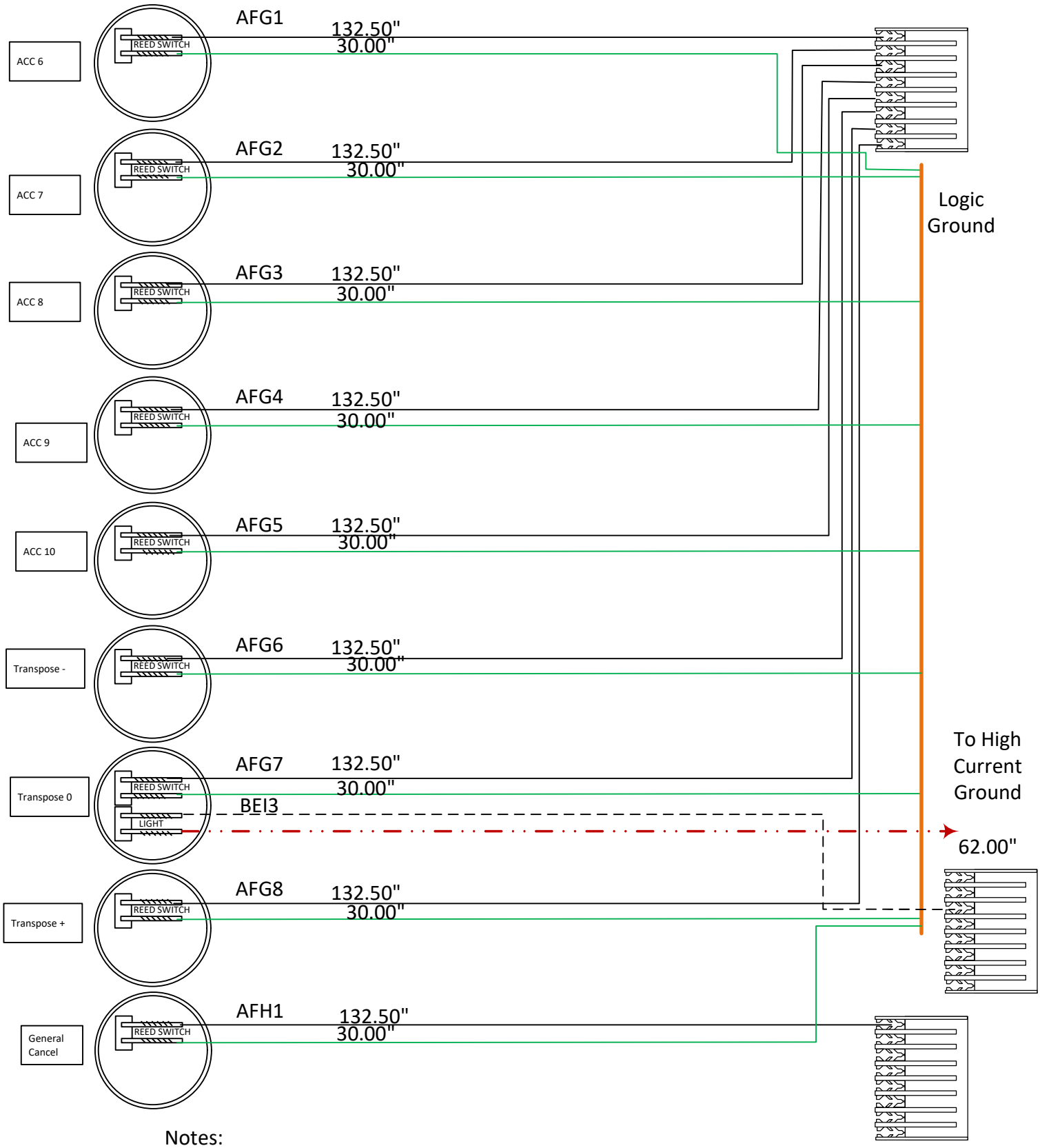
ACC 6
REED SWITCH
AFG1
132.50"
30.00"
ACC 7
REED SWITCH
AFG2
132.50"
30.00"
ACC 8
REED SWITCH
AFG3
132.50"
30.00"
ACC 9
REED SWITCH
AFG4
132.50"
30.00"
ACC 10
REED SWITCH
AFG5
132.50"
30.00"
Transpose -
REED SWITCH
AFG6
132.50"
30.00"
Transpose 0
REED SWITCH
LIGHT
AFG7
132.50"
30.00"
BEI3
Transpose +
REED SWITCH
AFG8
132.50"
30.00"
General Cancel
REED SWITCH
AFH1
132.50"
30.00"
Logic Ground
To High Current Ground
62.00"

Notes:

NOTES